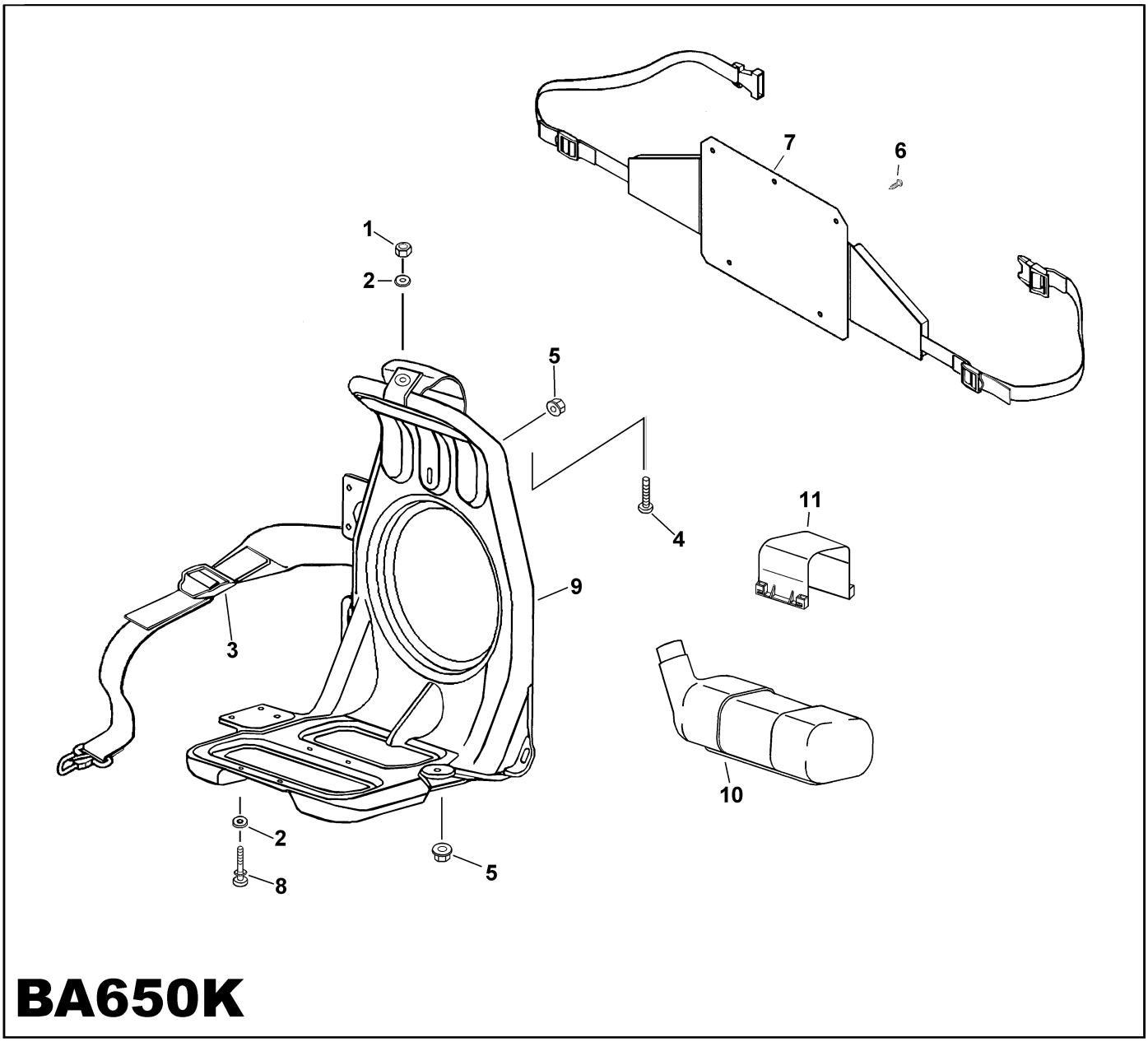

BA650K

PARTS LIST

													FEB . 02 .2007		1/1
REF. NO.	PARTS NO.			PARTS NAME		Q'TY	INCLUDING			PRICE (¥)	RECOMM. (%)	REMARKS
1	569L	0600		FLANGE NYLON NUT	M6	1						
2	68036	125		WASHER		5						
3	36063	205		SHOULDER BAND		1						
4	376L	0616		(+)TRUSS SCREW	M6×16	1						
5	31058	172		NUT		3						
6	68027	107		CLIP		5						
7	91027	137		KNAPSACK PAD		1						
8	375L	0625		(+)SCREW(W/SW)	M6×25	4						
9	36122	127		KNAPSACK FRAME		1						
10	36066	119		FUEL TANK		1						
11	36071	142		BAND		1						